INGEPROA



Tilt Switch Probe and Control Unit

ingeproa.com

thermo scientific

Authorized Distributor

Tilt Switch Probes And Control Unit

Tilt Switch Probes are electro-mechanical tilt sensors designed for sensing bulk materials presence or absence at the location of installation. Typical applications include high and low level detection and detection of plugged conditions in chutes. Also used for detecting the conditions of bulk material on conveyor belts.

INGEPROA Tilt Switch are made from two materials for different applications: The SS series with stainless steel body and the CB series which are made metal cast to meet heavy working conditions. Depending on the applications, can be supplied with a dedicated control unit or can be directly integrated in existing control system.

Tilt Switches have two different output options.



- Standard NC tilt switches which can be used as standalone or be paired with our control units, can detect tilted and vertical positions.

- Electronic output switches can only be used by pairing with a control unit and have the ability to detect status for tilted, vertical, fault and short circuit status. With the added advantage of having a fault relay, you can detect problems earlier with electronic models and prevent loss and downtime.

Ask us about the compability of Tilt Switches with your existing control units.

Features

- Robust and resistant
- Simple Installation
- Wide range of customization options
- Mercury and non-mercury options
- NC or electronic output options
- Control units to monitor your applications
- Delay options to prevent false alarms
- IP68 protection class
- Probe extensions are available for application needs
- Cable protection options reduce the risk of a failure

Tilt Switch Probes

C-39 Series - Heavy Duty Cast Iron Probe

Model	Tilt Angle	Mercury	Non-Mercury	Output
CB-39	35º	x		NC When vertical. Opens in angle.
CB-39A	20º	x		NC When vertical. Opens in angle.
CB-39NM	20º		x	NC When vertical. Opens in angle.
CB-39E	35º	x		Electronic. Must be used with Control Units.
CB-39AE	20º	x		Electronic. Must be used with Control Units.
CB-39NME	20º		x	Electronic. Must be used with Control Units.

SS-43 Series - Stainless Steel Probe

Model	Tilt Angle	Mercury	Non-Mercury	Output
SS-43	35º	x		NC When vertical. Opens in angle.
SS-43A	20º	x		NC When vertical. Opens in angle.
SS-43NM	20º		x	NC When vertical. Opens in angle.
SS-43E	35º	x		Electronic. Must be used with Control Units.
SS-43AE	20º	x		Electronic. Must be used with Control Units.
SS-43NME	20º		x	Electronic. Must be used with Control Units.

Technical Specifications

Enclosure	CB-39 Series: Nickel plated ductile iron casting SS-43 Series: Stainless steel
Mounting	Hanger and two S-hooks (included with probe)
Temperature Rating	-40°C, +80°C
Protection Class	IP67
Certifications	CE, EAC, optional cULus
Hazardous Area	Optional ATEX Zone 20/21

Probe Options

Hazardous Location Option

X: ATEX Zone 20/21 certified for hazardous locations. (Suffix to model name, eg. CB-39NMX)

Other Options

HT: High Temperature, -40 °C - 180 °C

C1: Cable Protection, braided steel conduit.

C2: Cable Protection, interlocked hose conduit.

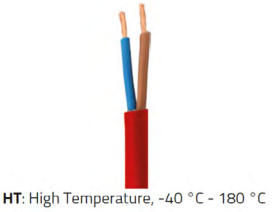

HT: High Temperature, -40 °C - 180 °C



C1: Braided Steel Conduit



C2: Interlocked Hose Conduit

Tilt Switch Probes

Probe Extension Options

BF: Ball Float. 4" by standard, custom dimensions are available. Useful with low-density material.

EP: Extension Plate. Useful for flow detection applications.

WP: Wear Plate. Used to lengthen the probe or to protect the probe body.

CP: Cross Paddle. Used for flowing material.

Probe Extensions

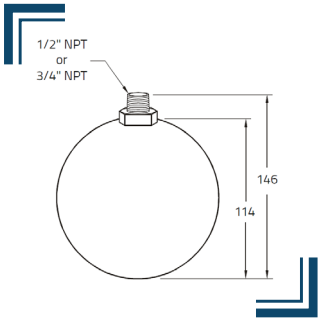

Ball Float

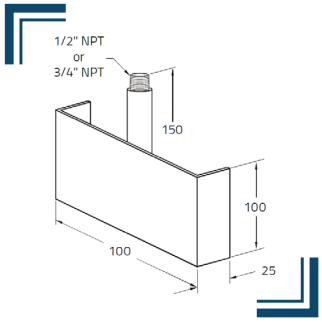

Extension Plate

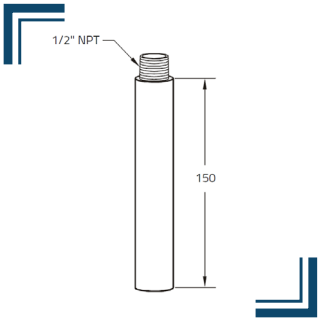

Wear Probe

Only for SS-43

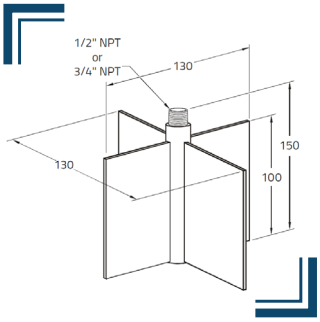

Cross Paddle

Custom dimensions for all extensions are available upon request.

Model Codification

CB-39
or
SS-43 _ _ _ _ _ _ _

Extensions Options
BF: Ball Float
EP: Extension Plate
WP: Wear Plate
CP: Cross Paddle

Cable Protection Options
No suffix: No Protection
C1: Braided Wire
C2: Interlocked Hose

Temperature Rating
No suffix: Standard Temperature
HT: High Temperature

ATEX Option
X: ATEX Zone 20/21

Output Options
No Suffix: NC when vertical
E: Electronic Output through Control Units

Contact Types
No suffix: Mercury, 35°
A: Mercury, 20°
NM: Non-mercury, 20°

Coding Examples

CB-39

SS-43NMX-HT-C2-EP

CB-39A-C1

Tilt Switch Probes

Technical Drawing

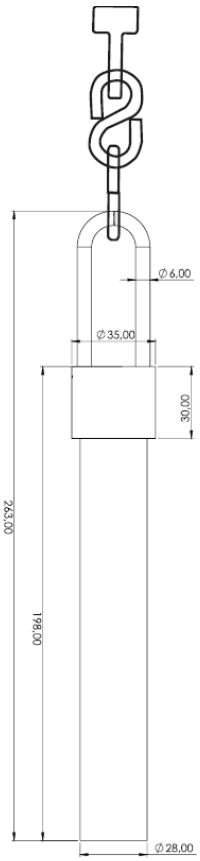

SS-43

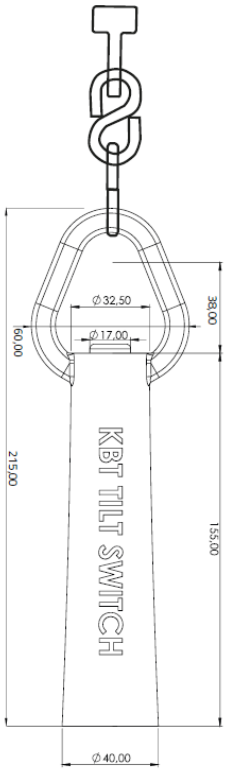

CB-39

Application Examples

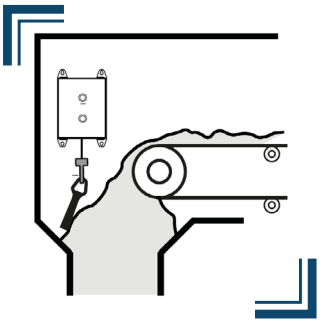

Plugged Chute

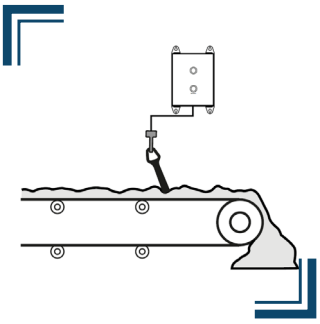

Flow Indicator

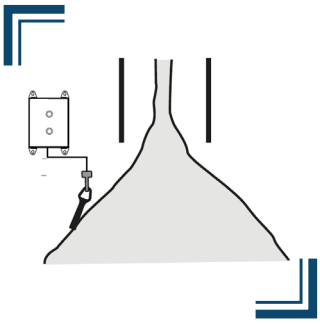

High Level

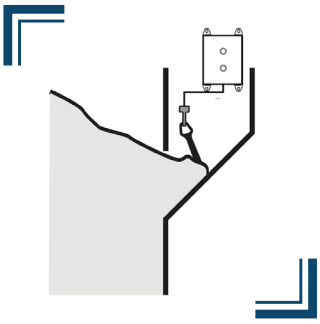

Low Level

Tilt Switch Control Units

Control Units

Model	Type	Enclosure	Alarm Contact	Fault Contact
KT -30F	Field mount	Metal	1 SPDT	1 NO, short circuit indicator. Only when use with electronic output models.
KT -30FS	Field mount	Stainless Steel	1 SPDT	1 NO, short circuit indicator. Only when use with electronic output models.
KT -32F	Field mount	Thermoplastic	1 SPDT	1 NO, short circuit indicator. Only when use with electronic output models.
KT -35DIN	DIN mount	Thermoplastic	1 NO	1 NO, short circuit indicator. Only when use with electronic output models.







Technical Specification

Enclosure	KT - 30F	Metal
	KT - 30FS	Stainless Steel
	KT - 32F	Thermoplastic
	KT - 35DIN	
Mounting	KT - 30F	Screwed into its place via brackets supplied.
	KT - 30FS	
	KT - 32F	
	KT - 35DIN	Din Mount
Temperature Rating	All models	-40°C, +80°C
Imput	All models	110/220 VAC, 50/60 Hz
Alarm Contact	KT - 30F	1 SPDT - 110/220 VAC 6 A - 30 VDC 6 A
	KT - 30FS	
	KT - 32F	
	KT - 35DIN	1 NO - 110/220 VAC 2 A - 24 VDC 3 A
Fault Contact	KT-30F	1 SPDT - 110/220 VAC 2 A - 24 VDC 2 A
	KT-30FS	
	KT-32F	
	KT-35DIN	1 NO - 110/220 VAC 2 A - 24 VDC 2 A
Delay	All models	1, 2, 4 or 6 seconds.
Protection Class	KT-30F	IP66
	KT-30FS	
	KT-32F	
	KT-35DIN	IP20
Certifications	All models	CE

Tilt Switch Probes

KT-35DIN Mounting Dimensions

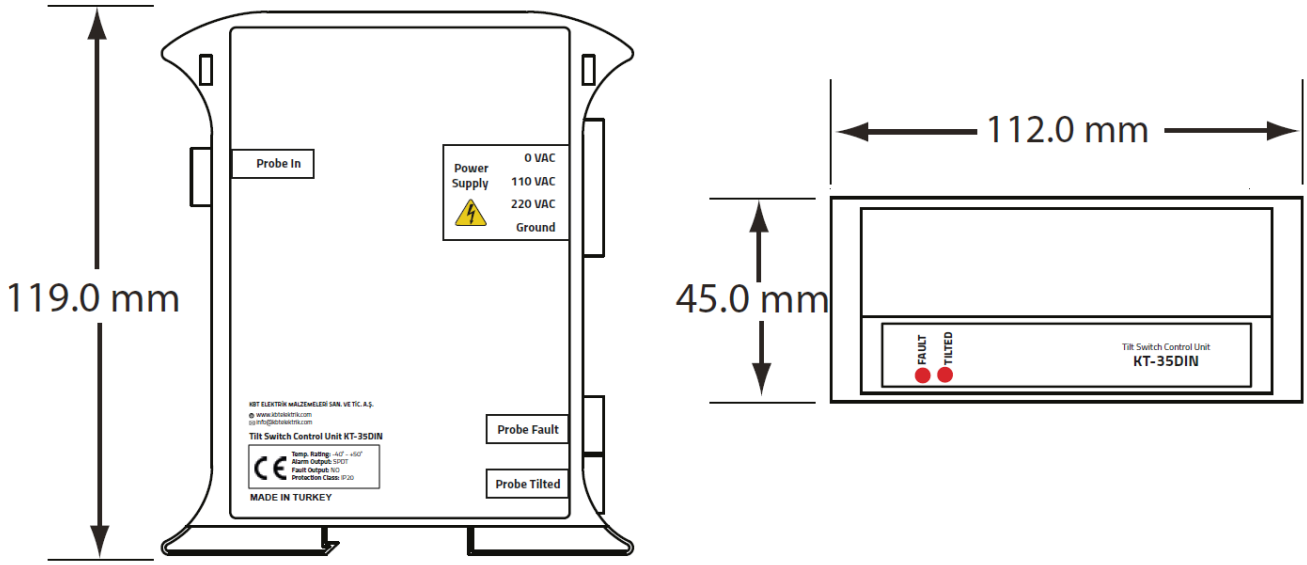

KT-30F / KT-30FS / KT-32F Mounting Dimensions

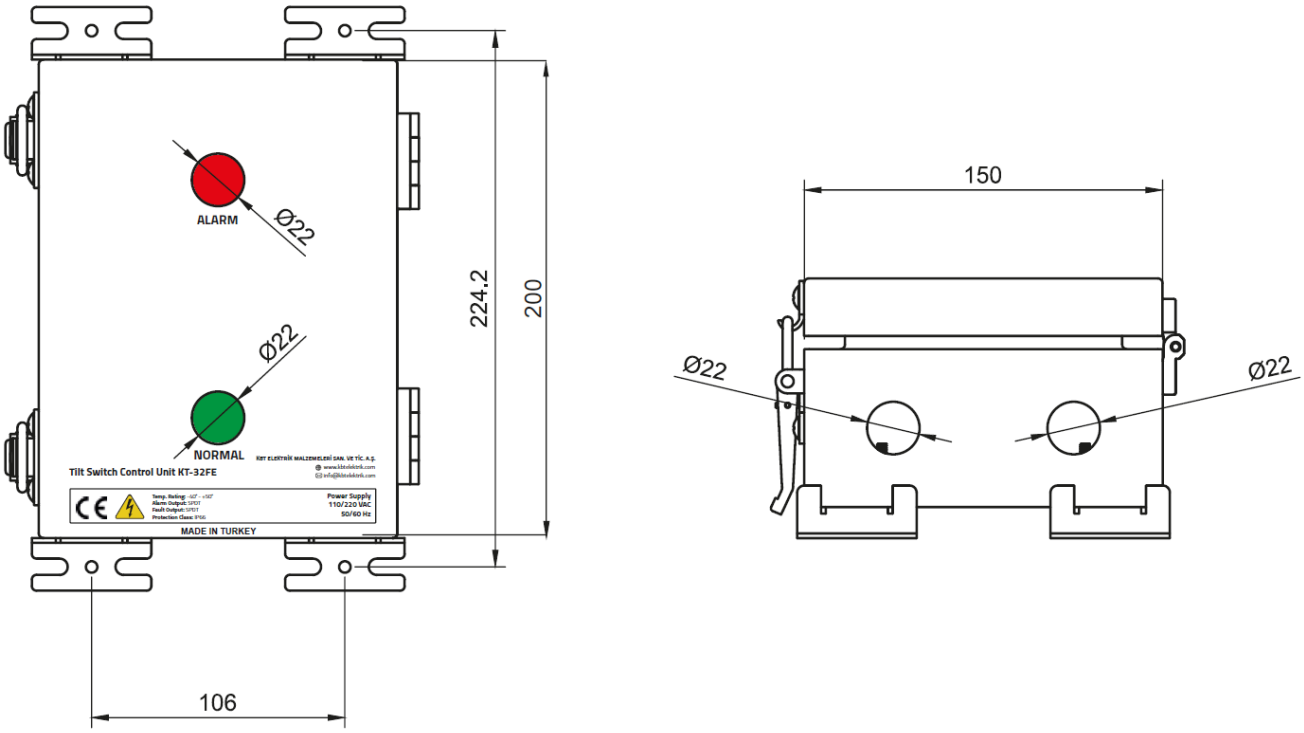



Our Distributor in your zone

INGEPROA

thermo scientific

Authorized Distributor

Our bulk weighing and monitoring product line is headquartered at our facility in suburban Zaragoza and sold and s e rviced by ourselves or our distributors.

Find out more at ingeproa.com

© 2023 INGEPROA SOLUTIONS S.L. All rights reserved. All other trademarks are the property of INGEPROA SOLUTONS S.L. and its subsidiaries. Please consult your local sales representatives for details .